*i*AM1-MIX8-12G

12G-SDI & Analog Audio Monitoring & Mixer with Optional Signal Upgrades

8 channel (or 8 pair) 12G-SDI & Analog Audio Monitor and Mixer with optional 2022-6 support, plus options to license additional input signals

The *i*AM1-MIX8-12G is a design that emphasizes individual mechanical controls for sum, mute and solo operations. This latest re-design of our successful MIX series has been enhanced with upgraded screen graphics and includes a touch screen, while retaining the individual channel rotary encoders. As part of our iSeries product line, it is a well featured and competitively priced **IP ready** audio monitor and mixer. The *i*AM-MIX8 can be configured to operate in either single channel (8 channel) or pair mode (16 channel).

Flexible. Adaptable. Future Proof.

Standard features include 12G-SDI and a pair of Analog inputs and outputs. Upgrade/license other signal formats and processing options, as and when needed, either initially or after purchase. Options for additional signals, include **Dante™ or Ravenna™ (with hitless 2022-7 support), SMPTE-2110, SMPTE-2022-6, AES3, and MADI.**

Network Capable with Remote access options:

The unit includes built-in support for remote monitoring provided by our MAVRIC software applications suite. All *i*AM Series monitors contain an onboard web server. Multiple units on the same network can be updated, monitored, and controlled via a web-based user interface.

Features/Benefits:

- Fast selection and summing of up to 8 channels or 8 pairs (16 channels),
- Master volume control that also provides a master mute/unmute
- Channel names can be displayed for each input or pulled from a router
- **Standard I/O:** 2 x 12G-SDI Inputs on BNC; 1 x 3G-SDI Output on BNC + 1 pair Analog I/O on XLR.
- HDMI output of the monitored video source included.
- **Optional I/O:** for AES3 on HD-15, (incl selected audio source converted to AES3 out), MADI on BNC (looped out), and SMPTE 2110 or SMPTE 2022 via SFP
- **Option cards:** Choose between AoIP, an additional 8 channels of analog inputs and outputs, 2 additional SFP cages, or a 12G/MAVRIC option card.
- Store and retrieve up to 64 presets
- Optional Output routing enables the flexibility to route input signals to various outputs
- Built-in speakers, headphone jack, USB and Ethernet ports.
- APIs for remote management and easy integration with 3rd party control systems.

Specifications	
Dimensions (W x H x D)	1RU in standard 19” rack: 19” x 1.75” x 5.5” (483 mm x 45 mm x 140 mm). Shipping dims: 23”x 6”x 12”
Shipping Weight / Net Weight	8.0 lbs. (3.6 kg) / 5.5 lbs. (2.5 kg)
Power Consumption / Supply	65W, 100 to 240 VAC ± 10%, 50-60 Hz, CE & UL approved
Display Type / Resolution	7” (178 mm) LCD Capacitive Touchscreen; 1242H x 280V
Viewing Angle	160° (H) x 160° (V)
Audio Channels	8 or16
Hum and Noise	Better than -68 dB below full output
Peak Acoustic Output	90 dB SPL @ 2 feet
Speaker Power Output	5W RMS per side, 12W Peak
Upgrades	Via USB or Web GUI

email: sales@wohler.com web: www.wohler.com

*i*AM1-MIX8-12G

12G-SDI & Analog Audio Monitoring & Mixer with Optional Signal Upgrades

Rear Panel (Options cards not shown, see Page 3)

Rear Panel Option Cards

OPT-ANLG/TOS (SKU 829170)

OPT-SFP (SKU 829179)

OPT-DANTE/RAVENNA with TOSLINK

OPT-DANTE/RAVENNA with Unbalanced Analog

OPT-RMOC-12G (829189)

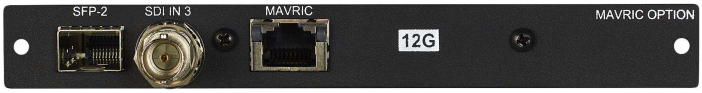

Ordering Information

BASE UNIT		
iAM1-MIX8	8121-0420	1U 12G-SDI & Analog Monitor & Mixer with multiple Upgrade Options
PROCESSING OPTIONS		
OPT-OUTPUT ROUTING	829159	Enables the flexibility to route input signals to various outputs
I/O OPTIONS – SOFTWARE ACTIVIATION KEY ONLY		
OPT-AES	829080	Enables monitoring of 4 x AES Input Pairs with 4 x AES Output Pairs. Software activation key.
OPT-MADI	829092	Enables monitoring of 1 x MADI64 input via BNC with a looped output. Software activation key.
SMALL FORM FACTOR PLUGGABLE (SFP) OPTIONS WITH SOFTWARE ACTIVATION KEY		
SFP-SDI	829089	3G/HD/SD-SDI single receiver w/ active loopback, HD-BNC Connectors
SFP-SDI-Fiber	829084	12G/3G/HD/SD-SDI or ASI single receiver w/ active loopback, HD-BNC Connectors
SFP-2022-6	829088	SMPTE 2022-6 Receiver; Multi-Mode 850 NM, LC (fiber) Connectors
SFP-2110 w/Ember+ or NMOS	829086-1	SMPTE 2110, Receiver; Multi-Mode 850 NM, LC (fiber) Connector. NMOS ships standard.
SFP-2110 w/Ember+ or NMOS or 2022-6	829087-1	SMPTE 2110 or 2022-6 Receiver; Multi-Mode 850 NM, LC (fiber) Connectors. NMOS ships standard
SFP-MM-MADI-FIBER	829081	MADI optical fiber transceiver, Multimode; LC Connectors
SFP-SM-MADI-FIBER	829082	MADI optical fiber transceiver, Single mode; LC Connectors
OPTION CARDS (1 OPTION CARD ONLY PER UNIT)		
OPT-ANLG/TOS	829170	Enable monitoring of 8 Analog channels on DB-25. Includes Optical TOSLINK input.
OPT-SFP Card	829179	Adds two additional 3G inputs to 3G products, or two 12G inputs to 12G products
OPT-DANTE / OPT-DANTE ANLG	829171 or 829171-1	Enable monitoring from up to 64ch Dante™ input streams, including primary and secondary RJ-45 for hitless/2022-7 support (for Dante and 2110-30 signals) and a Gigabit SFP cage allowing multi-mode and single-mode network SFP's for AoIP signals. Order 829171 for Optical TOSLINK Input or 829171-1 for 2 x unbalance Analog Inputs.
OPT-RAVENNA 64 / OPT-RAVENNA 64 ANLG	829172 or 829172-1	Enable monitoring from up to 64ch Ravenna™ input streams, including primary and secondary RJ-45 for hitless/2022-7 support (for Ravenna and 2110-30 signals) and a Gigabit SFP cage allowing multi-mode and single-mode network SFP's for AoIP signals. Order 829172 for Optical TOSLINK Input or 829172-1 for 2 x unbalance Analog Inputs.
OPT-RMOC-12G	829189	Will enable 12G inputs on any 3G iSeries Monitor! Includes single BNC and SFP slot for 12G/3G SDI or ST2110 input. **Also Enables MAVRIC functionality**, capable of monitoring 16 channels of audio (iAM & iVAM Series) plus a single video input on the iVAM Series, selectable from a choice of sources connected directly to the card, or inputs connected to the in-rack monitor.

Specifications subject to change, errors and omissions excepted
All trademarks, product names and images are the property of their respective owners
Any rights not expressly granted herein are reserved.

Wohler Technologies, Inc.
1280 San Luis Obispo Ave., Hayward, CA, 94544, USA
+1 510 870 0810 | sales@wohler.com | www.wohler.com

*i*AM1-MIX8-12G

12G-SDI & Analog Audio Monitoring & Mixer with Optional Signal Upgrades

Block Diagram

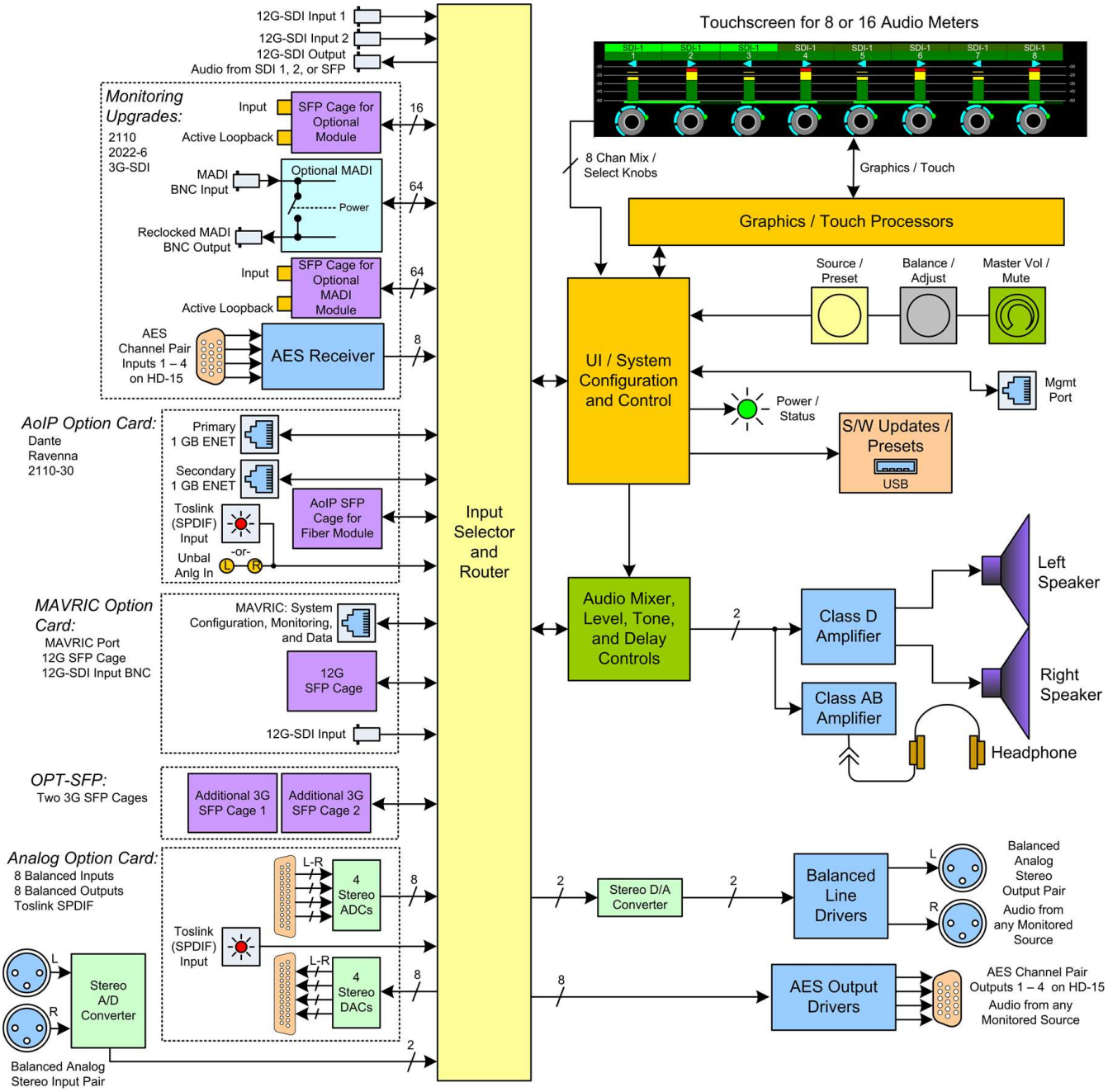

Specifications subject to change, errors and omissions excepted
All trademarks, product names and images are the property of their respective owners
Any rights not expressly granted herein are reserved.

Wohler Technologies, Inc.
1280 San Luis Obispo Ave., Hayward, CA, 94544, USA
+1 510 870 0810 | sales@wohler.com | www.wohler.com