*i*VAM2-12G

12G-SDI & Analog Video/Audio Monitoring & Metering with Optional Signal Upgrades

16 channel, dual screen, 12G-SDI & Analog Audio & Video Monitor with optional 2022-7 support, plus options to license additional input signals.

The *i*VAM2-12G is a premium version of our iVAM series offering 12G-SDI monitoring at a competitive price. It is a well featured and easy to use, 16 channel video and audio monitor which comes standard with 2 x 12G-SDI inputs on BNC connectors and a pair of Analog inputs on XLR connectors. Standard features include Loudness measurement, phase status and HDR detection. License other signal formats and processing options, including Dolby, AoIP (Dante or Ravenna), ST2110, and others as and when needed, either initially or after purchase. With touch screen controls, large 4.3" screens and a depth of under 6", the *i*VAM2-12G is the perfect solution for any application that requires a compact product for simple-to-complex monitoring of an evolving range of professional signals.

Features/Benefits:

- Video and audio monitoring (up to 16 channels) from multiple sources
- Up to 64 presets
- 2 x 12G-SDI Inputs on BNC that can also monitor 3G/HD/SD-SD; 1 x 12G-SDI Output of selected video source on BNC + 1 pair Analog in/out on XLR
- Optional Output routing enables the flexibility to route input signals to various outputs
- Optional I/O for AES3 on HD-15 (incl selected audio source converted to AES3 out), MADI on BNC (looped out), and SMPTE 2110 or SMPTE 2022 via SFP.
- HDMI Output of the monitored video source (1080p @ 60 Hz). Monitors first 8 ch of audio.
- Measure Audio Loudness using ITU-R BS.1770 or EBU R128 standards
- Option cards for AoIP, additional SFP's, or 8 channels of analog I/O, and TOSLINK
- Software upgradeable via USB or network
- APIs for remote management

Model	Part ID	Description
*i*VAM2-12G (Base Unit)	8124-0200	1RU Base unit, includes SDI & Analog as standard
		I/O Options
OPT-AES	829080	Enables decoding and monitoring of 4 x AES inputs, 1 AES Output
OPT-MADI	829092	Enables decoding and monitoring of 1 x MADI64 input via BNC
OPT-DOLBY	829174	Allows decoding and monitoring of Dolby® D, DD+ & E. Includes Dolby zoom & metadata
SFP-MM or SM-MADI-FIBER	829081/82	MADI fiber transceiver, Multimode or Singlemode; LC Connectors. Use 829082 for SM
SFP-SDI	829089	3G/HD/SD-SDI single video receiver w/ active loopback, HD-BNC
SFP-12G-SDI-Fiber	829160	12G, 3G/HD/SD-SDI or ASI single receiver w/ active loopback, HD-BNC
SFP-SDI-OUTPUT	829083	3G-SDI Transceiver; HD-BNC connectors; I/P and O/P are both SDI
SFP-2110 w/Ember+ or NMOS	829086/-1	Receiver; Multi-Mode 850 NM, LC Connectors. Use 829086-1 for NMOS variant
SFP-2022	829088	Receiver; LC Connectors
SFP-2110 w/Ember+ or NMOS +2022-6	829087/-1	Either-Or; Multi-Mode 850 NM, LC Connectors. Use 829087-1 for NMOS variant
OPT-OUTPUT ROUTING	829159	Enables the flexibility to route input signals to various outputs
		Option Cards
OPT-ANLG/TOS	829170	Enable monitoring of 8 Analog channels on DB-25. TOSLINK included.
OPT-DANTE OPT-Ravenna	829171 829172	This AoIP option card enables decoding and monitoring of up to 64 ch of Dante™ or Ravenna™ / AES67/ 2110-30 Input streams (with NMOS Support). These option cards provide 2 x RJ-45 ports for 2022-7 support + SFP cage allowing MM and SM SFP's as an alternate primary for AoIP Signals. TOSLINK included in both cards.
OPT-SFP Card	829179	Adds two additional 3G inputs to 3G products, or two 12G inputs to 12G products

*i*VAM2-12G

12G-SDI & Analog Video/Audio Monitoring & Metering with Optional Signal Upgrades

Rear Panel & Option Cards

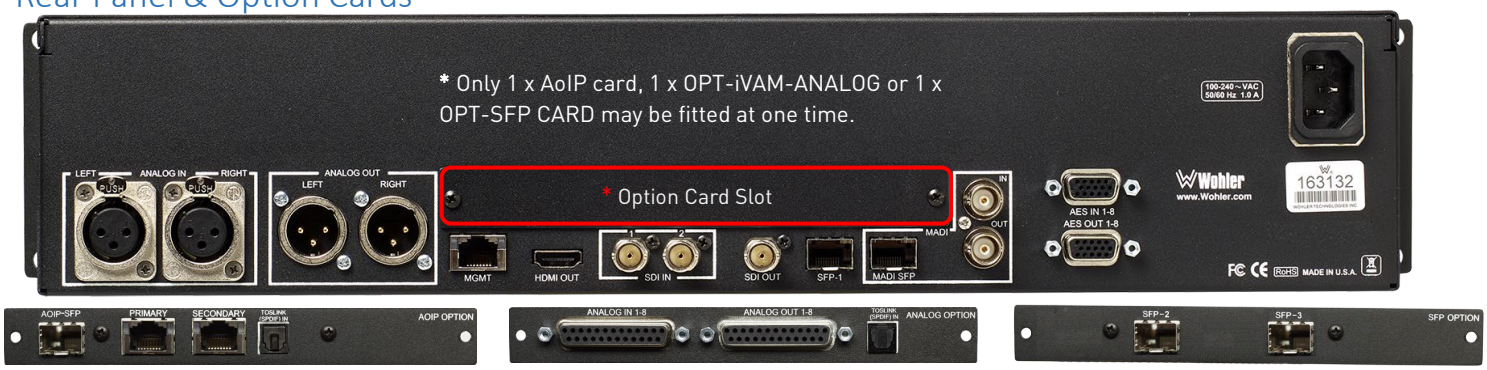

OPT-DANTE & OPT- RAVENNA | OPT- ANLG/TOS | OPT-SFP CARD

Block Diagram

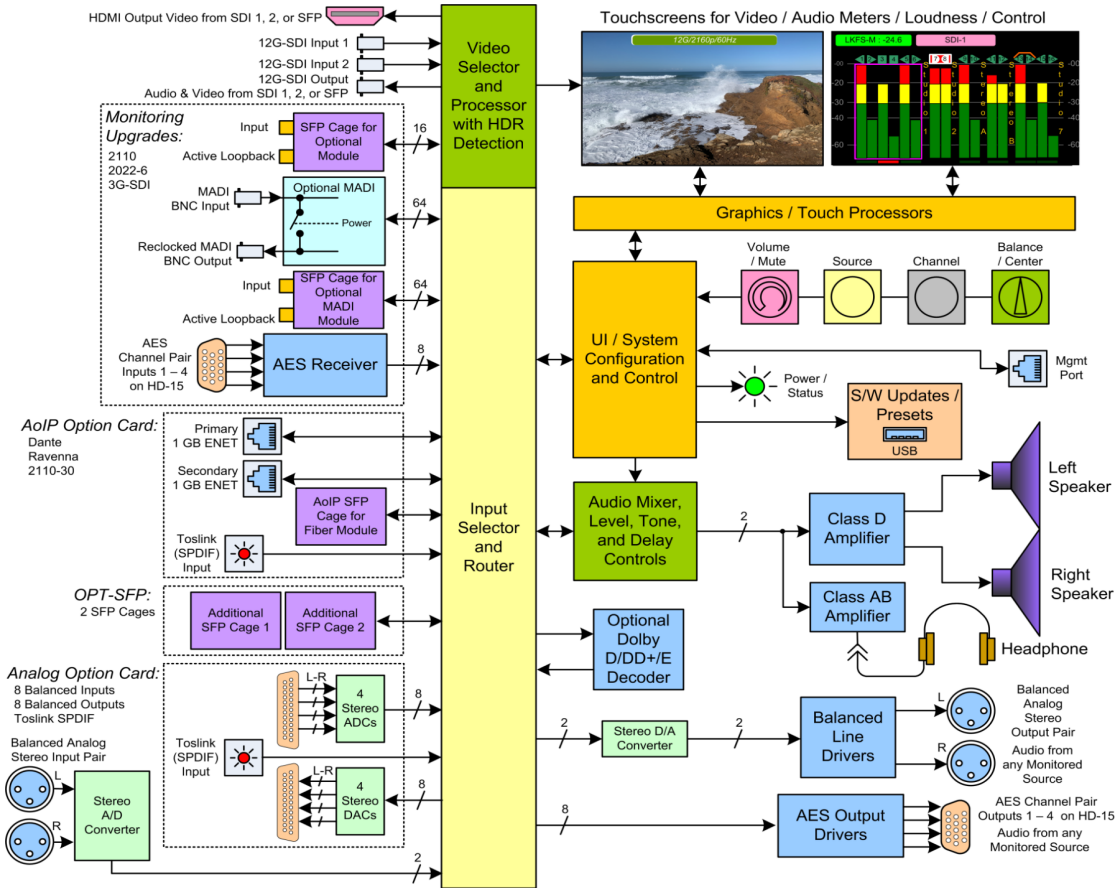

Specifications	
Dimensions (W x H x D)	2RU in standard 19" rack: 19" x 3.5" x **5.5"** (483 mm x 89 mm x **140** mm)
Shipping Weight / Net Weight	12.0 lbs. (5.5 kg) / 8.0 lbs. (3.6 kg)
Power Consumption / Supply	60W, 100 to 240 VAC ± 10%, 50-60 Hz, CE & UL approved
Display Type / Resolution	4.3" (109 mm) LCD Capacitive Touchscreen x 2; 480H x 272V
Viewing Angle	160 (H) x 160 (V)
Audio Channels	16 Max
Hum and Noise	Better than -75 dB below full output
Peak Acoustic Output	104 dB SPL @ 2 ft
Speaker Power Output	RMS Each Side: 15W Continuous / 30W Peak
Upgrades	Via USB or GUI web interface
APIs	Provide easy integration with 3rd party control systems

Specifications subject to change, errors and omissions excepted
All trademarks, product names and images are the property of their respective owners
Any rights not expressly granted herein are reserved. REV: 03/11/22

Wohler Technologies, Inc.
1280 San Luis Obispo Ave., Hayward, CA, 94544, USA
+1 510 870 0810 | sales@wohler.com | www.wohler.com